Centrum Rzeczoznawstwa Budowlanego

Open Access Journal
Modern Engineering 1 (2020) 26-37
journal homepage: http://mengineering.eu

Modern Engineering

Air conditioning systems in data center

Andrzej GRZEBIELEC*[1] and Natalia KŁOS[1]

[1]Warsaw University of Technology, Warsaw, Poland

Abstract

Data center cooling is a specific issue. High heat flux density and maintaining rigorous operating conditions require suitable cold from the cooling system. The article lists the most common methods of data center cooling and classification of technological systems in data center facilities.

Keywords: air conditioning, datacenter, energy efficiency

1 Introduction

In the case of datacenter air conditioning, heat flux density evaluated in W / m^2 is many times higher than in the case of standard home air conditioning. The result is that other types of technical solutions are barely used in such type of installations - especially at the points of supplying cold to receivers. As with all industries related to energy conversion, issues related to energy efficiency are very important [6, 10, 22]. Datacenter are designed to use as little energy as possible. Due to the fact that the demand for cooling capacity is almost constant throughout the year, solutions that use sorption cooling systems are profitable [4, 20], adiabatic cooling systems [16, 18] or combined systems including ORC, solar collectors, solar cells or cold storages equipped with PCM [3, 9, 11].

2 Data center cooling systems

As mentioned in the introduction, server room air conditioning differs from comfort air conditioning known on a daily basis, primarily in the level of heat flux density [14, 21]. In the case of server rooms, the requirements that the air conditioning system must meet are much higher. It results from strictly defined working conditions of electronic devices [19]. The proper functioning of many companies is based on the reliability of servers, therefore the precision air conditioning found in server rooms must ensure their trouble-free and efficient operation. In practice, this means controlling temperature and humidity in a particularly accurate manner.

2.1 Split type air conditioning

The simplest solutions using a compressor refrigeration system are split type air conditioners. This is a solution dedicated to places where the goal is to maintain the comfort of people staying in them. Its relatively simple structure (Fig. 1) and operating principle allow installation in almost any place from which one can access the surroundings. In the case of small server rooms, where heat gains from servers, electrical installation, UPS are in the range of few to several kilowatts, where the use of expensive and much more complex solutions is not profitable.

When choosing the cooling capacity, several situations should be analyzed, because different demand for cooling will arise during normal operation of the servers, and different when powered by UPS [17]. It should also be taken into account that in the future the number of devices may increase - it is therefore worth leaving some power reserve. Split air conditioners can only be used if each of the rack cabinets is washed with cold air and the temperature of the air leaving the rack is within the standard provided by the server manufacturer. In addition, it should be remembered that comfort air conditioning works only a few hundred hours in the summer, while air conditioning in the server room - all year round. This means that the air conditioner for the server room must be adapted to continuous operation, also in winter. Most standard split air conditioners can operate in cooling mode only down to -5° C.

*corresponding author: E-mail address: andrzej.grzebielec@pw.edu.pl (Andrzej GRZEBIELEC)
Received 21 February 2020
Available online 15 March 2020
ISSN 2450-5501
Published by Centrum Rzeczoznawstwa Budowlanego

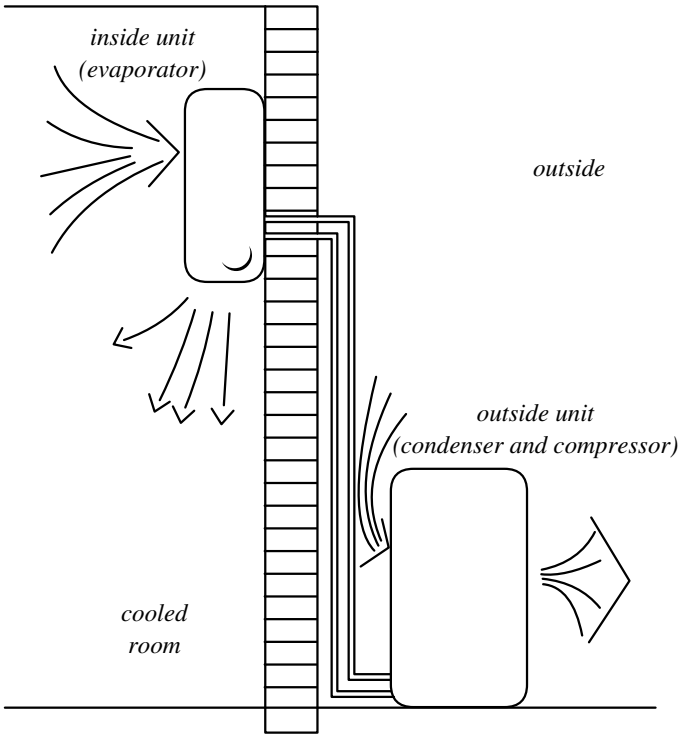

Figure 1. Split type air conditioning [5]

2.2 Underfloor Plenum Supply

Perimeter air conditioning systems are the most popular solution in the field of precision air conditioning. This is due to the fact that they have great possibilities to adapt to the individual requirements of the server room and features such as architecture, rack cabinet arrangement and thermal power. In this solution, precision air conditioning cabinets are located on the perimeter of the server room. Precision air-conditioning cabinets can also be divided in terms of the air flow method - the air can be blown in from above or below. Diagram 2 presents common methods of air flow through perimeter air conditioning systems.

By far the most commonly used solution is to install the wardrobe on a technological floor with a height of 450 - 600 mm (in accordance with ASHRAE recommendations), with a higher height from this range recommended [18]. In this solution, cold air is distributed below the rack cabinets and delivered to them through perforated panels placed in the floor. Then the air washes the servers, heats up and returns to the cabinet (Fig. 2. a). The air conditioning cabinet cools the air in the water cooler or in the evaporator of the compressor system. In order to optimize this process, it is recommended to separate hot and cold zones (hot aisle - cold aisle). In this system, the rack cabinets are arranged in rows, between which there is a cold and hot corridor alternately (Fig. 3).

In the cold aisle, to which air is supplied, the rack cabinets are facing each other in the hot aisle - backwards. The optimal corridor distribution is 120 cm cold aisle and 90-100 cm hot aisle. To increase system efficiency, use blanking panels to cover all shelves where the server is not installed and eliminate or reduce the resistance to motion caused by loose hanging cables, cable penetrations, etc. Due to this, cold air will only flow through the servers, which will increase cooling efficiency. The undesirable phenomenon in this solution is the mixing of cold (supply) air with warm, heated by servers. SHI (Supply Heat Index) and RHI (Return Heat Index) indexes are used to assess the occurrence of such a phenomenon. The first factor describes how much of the fresh, blown air mixes with the hot air that is removed from the rack. The second determines how much cold air mixes with hot air in rack cabinets. These values add up to 1 and the ideal situation occurs when RHI = 1, which means that there is no bypass airflow phenomenon and the air does not recirculate within the cabinet, and hot and cold aisles are perfectly separated.

A way to improve the cooling efficiency is to close the hot (HAC - hot-aisle containment) or cold (CAC - cold-aisle containment) aisles (Fig. 4). This solution prevents mixing of air streams. The disadvantage of this solution is that in the event of a power failure the amount of cold air is much smaller (in the hot aisle the temperature can reach even 38-40 ^{o}C), which is why the recommended time for removing the fault is very short. In addition, high air temperature

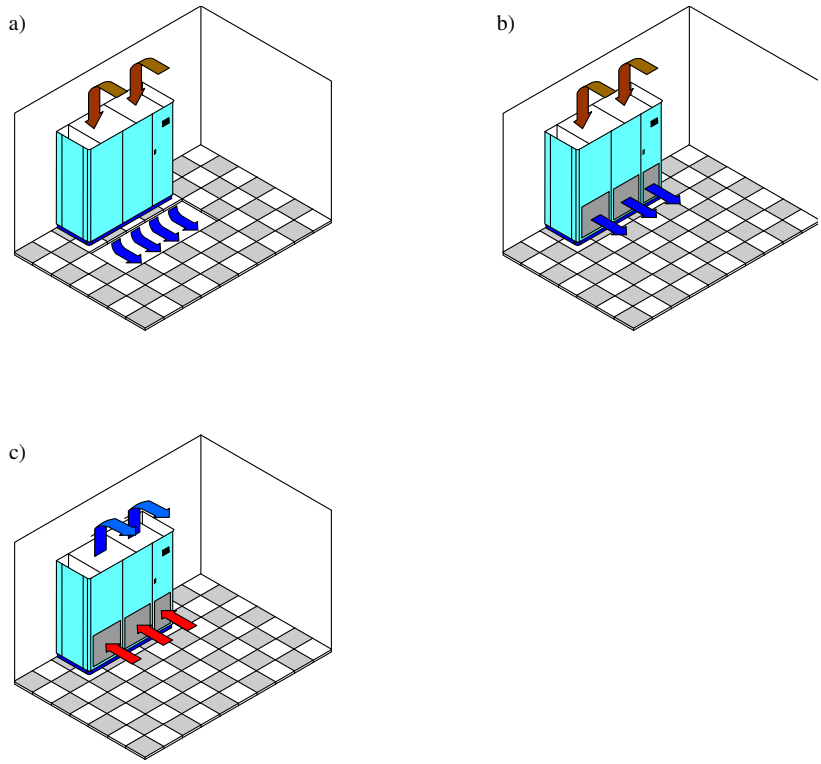

Figure 2. Methods of air supply in perimeter air-conditioning cabinets [7]

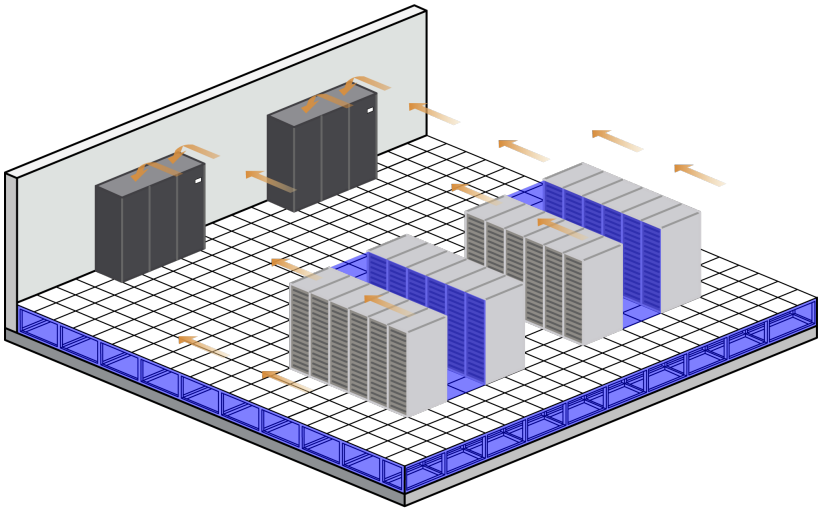

Figure 3. Perimeter air conditioning with Hot Aisle–Cold Aisle layout [7]

will cause great discomfort to a person entering the room.

The advantage of HACS, although more difficult to implement in existing server rooms, is that in the event of a breakdown, cold air resources are definitely greater than in CACS, and the conditions for people staying in it are more affordable.

Sometimes, for various reasons, it is not possible to install a raised floor. Due to this, solutions have been created that do not require its implementation. They are shown in Figure 2.b. and 2.c. In the first option (2.b.), cold air is blown down, and then directed to the rack cabinets to receive the heat generated by the servers. In the next stage, the heated air rises and returns to the precision air conditioning cabinet. In the second version (2.c.) cold air is blown into the room from above the wardrobe, then it falls down and displaces the previously heated air by directing it to the inlet of the air-conditioning cabinet located at the bottom. This causes a constant circulation of air in the room.

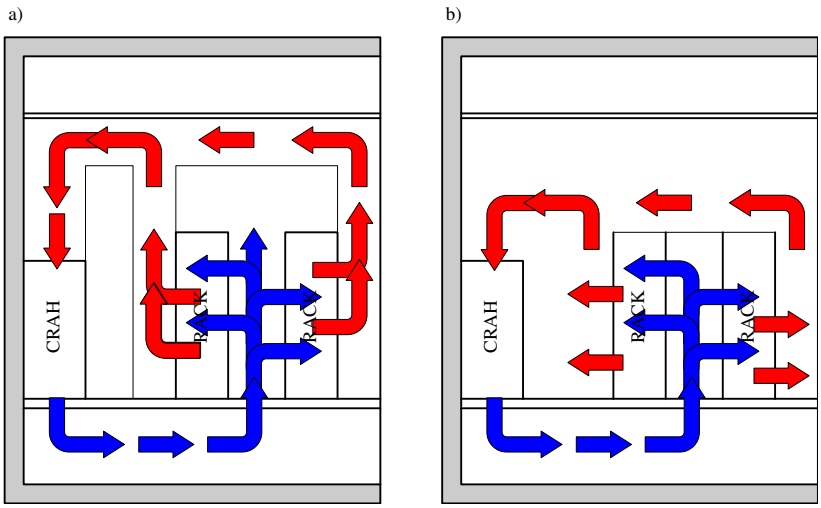

Figure 4. Separation of a) Hot Aisle and b) Cold Aisle [23]

2.3 In-row system

In-row systems, the air conditioners are placed in rows between the rack cabinets. These solutions are primarily dedicated to high power density cabinets. Moreover, there is no need to install a raised floor. The principle of operation of row systems consists in taking over the warm exhaust air from the rack cabinets immediately in the hot aisle and cooling it in order to prevent hot and cold air from mixing. The refrigerant is fed directly to the air conditioner, so the air circulation is significantly reduced. This allows the use of lower power fans, which reduces electricity consumption. In addition to the system with a low-boiling refrigerant, it is possible to use the system with ice water, which, however, involves some risk, through which investors are often still not convinced by this type of solution - the risk of contact of expensive equipment with water. Due to the relatively close contact of the air conditioner with the rack cabinet, servers may flood in the event of even a small leak in the installation, which will result in not only failure, but also destruction of the equipment. Therefore, despite the great advantages associated with the use of an ice water system, it often loses in a clash with a traditional system for security reasons. The big advantage of in-row air conditioners is that almost all cooling power is used to cool the air heated by the servers, which significantly improves efficiency.

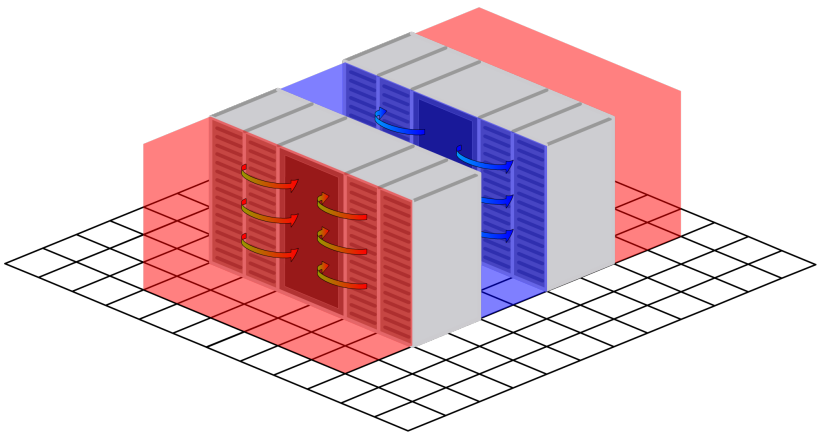

Figure 5. Principle of in-row systems with Hot and Cold Aisles and cold [7]

A typical solution with the use of row air conditioners is shown in Fig. 5. As in the case of perimeter air conditioning, the best solution is to separate hot and cold aisles. The operating principle of such a system is as follows: warm air from behind the rack cabinets is taken in by the air conditioner, and then cooled and blown out from the front of the cabinet, into the cold aisle. From there it is sucked by servers, from which it receives heat, and then it is blown out back to the hot aisle.

2.4 RACK's air conditioning systems

In some cases, perimeter or row systems are insufficient due to the high power density in the rack. In such cases, rack air conditioning may be the solution, as it is able to dissipate very large heat fluxes coming e.g. from blade servers. Air conditioners of this type are installed separately for each rack cabinet, and are located inside or next to the cabinet. There are two types of rack air conditioning systems: open and closed.

In open systems with an external cooling air circulation, the heat exchanger is mounted in the cabinet structure, e.g. on the back panel. No additional fans are installed then - the air flow is caused by server fans. When using such a solution, only sensible heat is dissipated, and external devices, e.g. precision air-conditioning cabinets, are responsible for any humidification.

In closed systems with internal cooling air circulation (closed in the cabinet space) additional air flow is caused by additional fans. An exemplary diagram of the air circulation is shown in Fig. 6 and Fig. 7: the air is blown sideways, washes the servers and after heating it returns with a rear inlet to the exchanger. The humidity level does not change because the circuit is closed, which eliminates the costs associated with additional humidification.

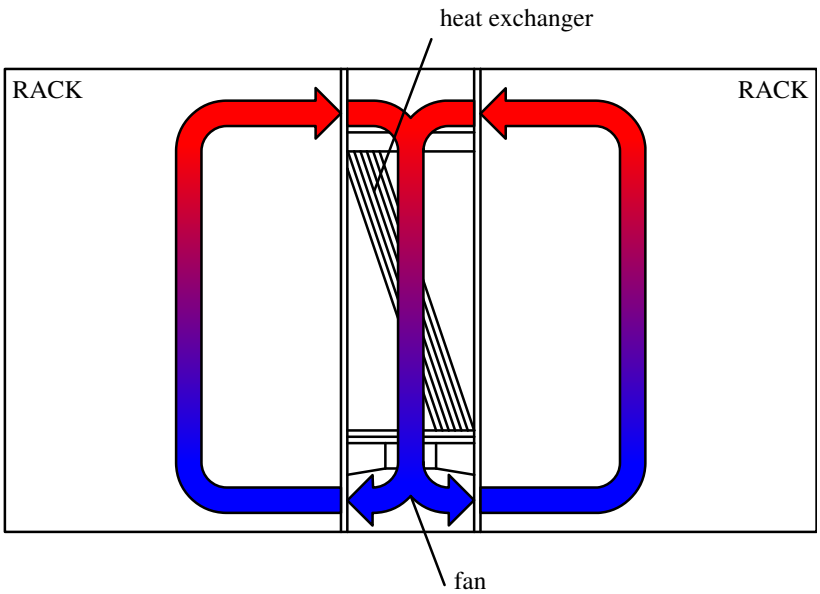

Figure 6. RACK type air conditioner - top view

2.5 Ceiling Plenum Distribution

Suspended units are installed above rack cabinets as an independent air conditioning system or as a support for another system. The operating parameters of the refrigerant are regulated so that it receives heat only in the open form (its temperature is maintained above the dew point of the air in the server room), and if necessary, an additional device, e.g. an air-conditioning cabinet, is responsible for regulating humidity. In the nadackack system, as in the systems described earlier, the most effective solution is to separate hot and cold corridors. Fig. 8 shows the suspended system.

2.6 Klimatyzacja procesorowa

This solution is dedicated to server rooms with exceptionally high requirements with power densities reaching up to 60 kW / rack. In this system, the refrigeration system is fed directly to the processors, which means that the share of air as an intermediary in heat exchange has been eliminated. The refrigerant can be both water and refrigerant, however, the risk of flooding servers with water raises investors' concerns even more than in the case of row systems.

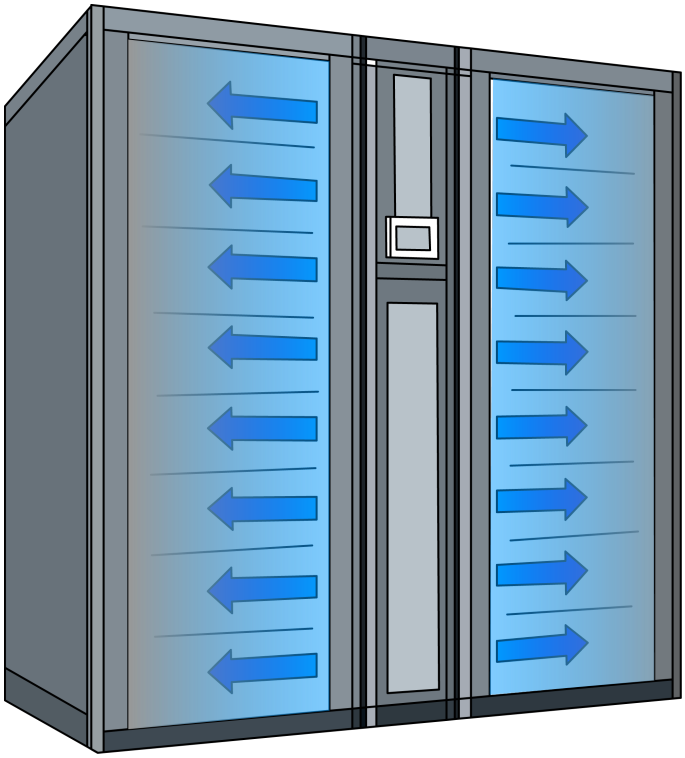

Figure 7. The method of air supply in a rack air conditioner - front view [7]

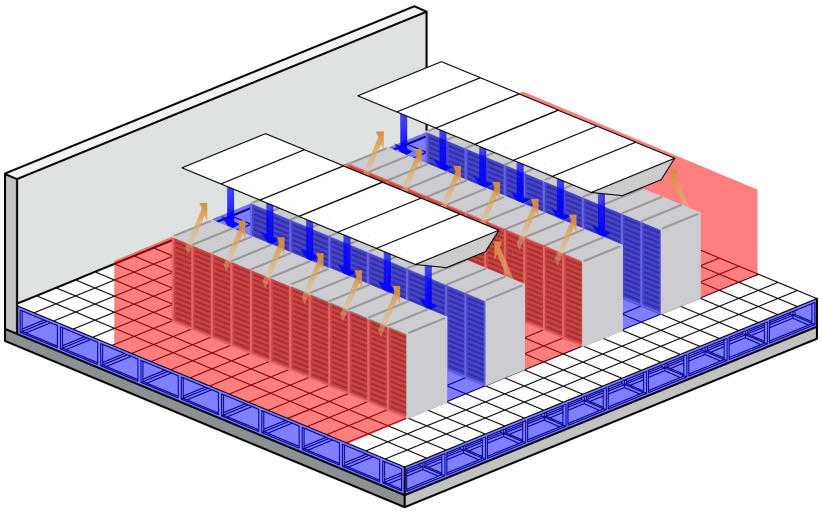

Figure 8. Over-air conditioning system with Hot and Cold Aisles

3 The most popular support systems

3.1 Free-cooling

New server rooms are characterized by an increasing demand for cooling power. This is associated with huge operating costs, which each owner of this type of facility wants to reduce to a minimum. In response to the growing market requirements, new solutions are created to optimize the operation of the server room in terms of energy consumption. One of them is free-cooling - a concept based on the use of "free" cooling from the air. Free-cooling can be divided into direct (air) and indirect. In free-cooling direct air, if it is cooler than the internal, is blown into the building with the help of fans, thus cooling the computer equipment. This method, although very effective, has several disadvantages. First of all, outside air must be filtered before reaching the server room, and due to the large amount of contaminants,

filters must be replaced very often. Secondly, outdoor air usually has a lower moisture content during the winter, which requires additional humidification after delivery to the room. Both of these issues are associated with additional funding. Moreover, during high outside temperatures it is necessary to provide an alternative source of cooling.

Another type of free air cooling is indirect free cooling [8, 15]. Its name comes from the fact that the heat exchange takes place in the exchanger (air-to-air type). This is a relatively new system, which is gaining popularity recently. It works as follows: opposingly directed streams of extracted, cold outdoor air and hot indoor air meet in the heat exchanger, where heat exchange occurs between them. At the end of the process, the cooled internal air returns back to the server room, and the heated external air is exhausted. This solution, although not as effective as free-cooling direct, eliminates the disadvantages associated with it, i.e. it does not require air filtering and partially reduces the need for intensive moisturizing. It cannot be eliminated completely, because the exchanger has a phenomenon of water condensation on the inner wall of the exchanger, which is caused by the cooling of the exchanger walls to a temperature below the dew point of the air inside the server room. In this solution, as in the previous one, an alternative source of cooling is needed for too high outdoor temperatures.

An interesting solution is indirect free-cooling with chilled water as an intermediate medium and a liquid cooler acting as a free-cooler. The most effective solution in the energy saving category would be a system in which the only source of cooling was a free-cooler. This would mean complete abandonment of the compressor circuit, and hence - great savings. The principle of operation of the system with free-cooling switching off the compressor circuit is as follows: Firstly, in the water cooler located in the air-conditioning cabinet, the chilled water draws heat from the hot supply air to the exchanger. The water is pumped straight into a free-cooler (usually a dry-cooler) in which it releases heat to the surroundings. This is the second stage of heat transfer. Then the cooled water returns to the closet, where it again cools the air heated by the devices. This system is extremely economical because it requires energy only to power the circulation pump. Unfortunately, during peak summer temperatures in Polish conditions it often turns out to be insufficient.

How much free-cooling can be used for a large part of the year depends on the permissible temperature in the server room. The higher it is - the longer the period is because water does not have to be cooled down to a very low temperature. There are server rooms that, due to the high temperature of the servers, cover the total cooling demand only from free-cooling.

However, if the guidelines for the allowable operating temperature of servers do not allow for its increase, an additional circuit using a low-boiling factor is necessary, which will allow heat to be collected from the server room during adverse external temperatures. There are several options for connecting these circuits. One solution is to mount a free-cooler directly in front of the condenser of the chiller and use a three-way valve in front of the evaporator on the water side. The technological scheme of such a system is shown in Fig. 9, and its operating principle is as follows: water, after receiving heat from the air in the room, is pumped into the aggregate with a free-cooler. Depending on the outside temperature, the three-way valve directs it to a suitable heat exchanger. In the period of high temperatures, which do not allow the use of free-cooling, the valve is closed and the water is directed to the exchanger with the evaporator of the compressor circuit, in which it gives off heat. When the ambient temperature drops to 1° C lower than the desired return water temperature, the three-way valve opens and the water is pumped into the free-cooler, where it is pre-cooled. Then it goes to the exchanger with the evaporator, where it is cooled to the required temperature, then to return to the installation inside the building. At low outdoor temperatures, i.e. those that allow you to take full advantage of the free-cooling function, the chilled water is directed to the free-cooler, where it cools down while the compressor circuit is off.

Another example of a combination of water and compressor circuits is the installation of a free-cooler and refrigeration unit in series (Fig. 10.). The operating principle of such a system is very similar to the system discussed earlier, and the difference lies in the disconnection of the aggregate and free-cooler. on separate units. The disadvantage of this system is the inability to use the free cooler to cool the condenser in the aggregate.

Another very effective solution is the use of a double cooler in the precision air-conditioning cabinet. In this system, heat is removed either in the water cooler or in the evaporator of the compressor circuit (simultaneous operation of both coolers is also possible). As in the systems described in the previous paragraphs, three operating conditions are distinguished depending on the external conditions. The main difference is that both circuits were fed directly to the cabinet itself, which increases the efficiency of heat exchange during the operation of the compressor circuit. Two versions of this solution are available: with an air-cooled or water-cooled condenser. The second version allows the use of a free-cooler to cool the water receiving heat from the condenser during summer and transition. In this variant, the condenser is placed inside the cabinet.

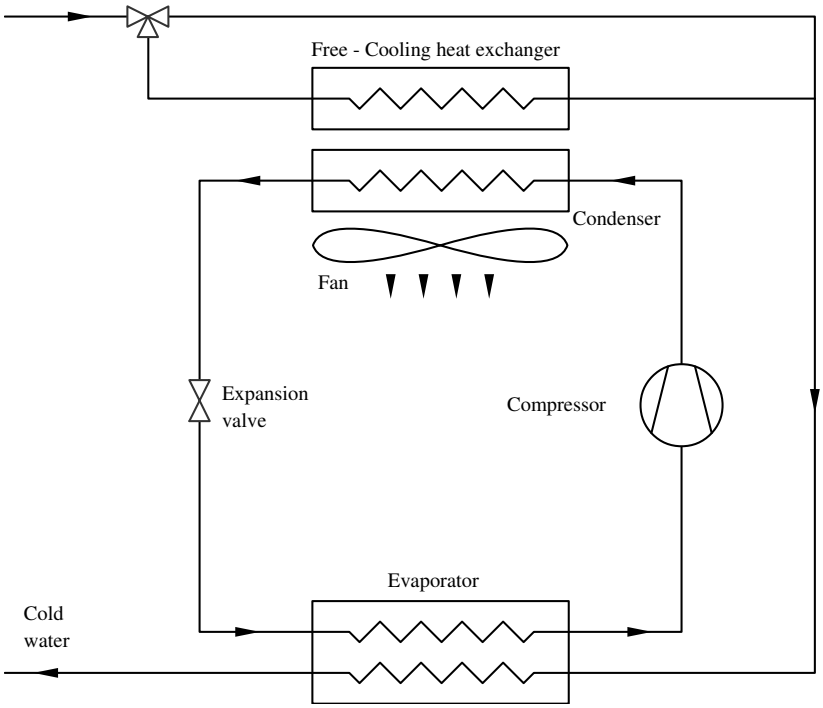

Figure 9. Cooling circuit with an aggregate with free-cooling function [24]

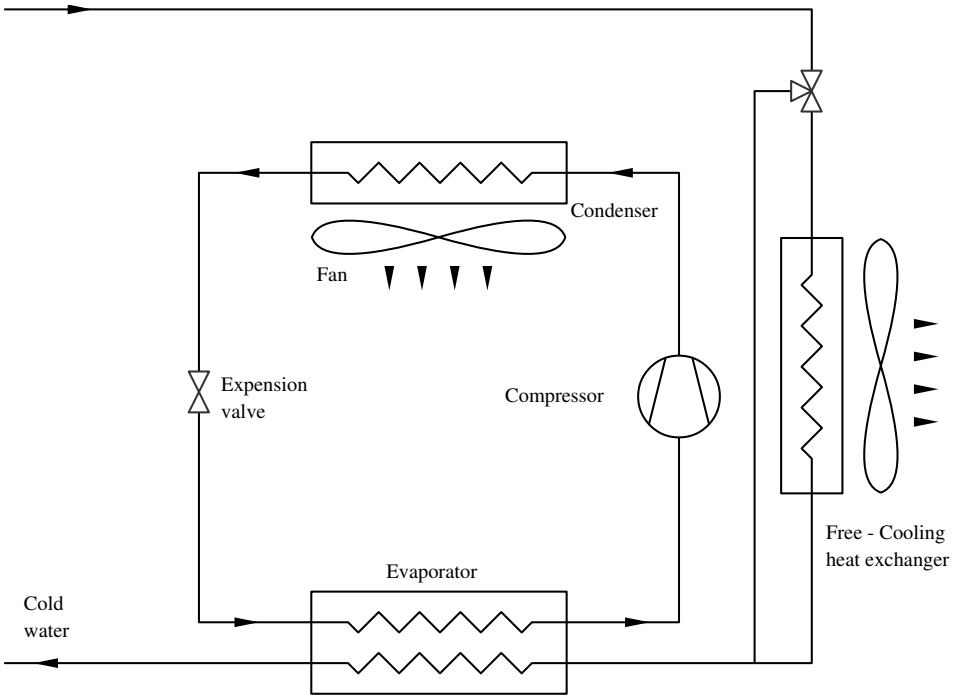

Figure 10. Cooling circuit with free-cooler and chiller connected in series.

4 Classification of server room circuits

To achieve the best results combining reliability, high performance of devices and economy, it is necessary to ensure appropriate conditions in the server room. A set of principles and guidelines describing the creation of refrigeration systems can be found in the manuals of ASHRAE (American Society of Heating, Refrigerating and Air-Conditioning Engineers), an organization whose goal is to provide optimal solutions dedicated to the HVACR industry and to spread knowledge related to it [2, 13].

4.1 Indicators used to assess server energy consumption

Server heat sources are primarily servers. It is obvious that they need electricity to work. Ultimately, this energy is almost completely converted into heat, which is emitted in devices. Depending on the capacity and number of devices, different heat fluxes are emitted in the room. The most commonly used indicators to characterize the maximum heat load in the server room are:

- power per unit area [W/m^2];
- power per rack cabinet [kW/rack];

These indicators are used to determine the power density in the server room, based on which the appropriate refrigeration system is selected. These indicators can be used interchangeably depending on the needs - sometimes the exact number of cabinets is not known at the beginning of the design stage - then a better solution is to carefully consider the initial value of the heat flux per unit area. Nevertheless, there is often a belief in the industry that a more reliable indicator is the heat output per single rack cabinet.

Depending on the type of equipment requiring cooling (e.g. corporate servers, mass storage servers, personal computers), the rooms can be divided into classes for which the supply air parameters have been determined. Recommended and allowable values are given for each class. Controlled parameters include, among others, relative humidity. The humidity level is very important due to the possibility of overvoltage occurring in too dry conditions or moisture in devices in very humid conditions. In order for the devices to work reliably, while maintaining adequate performance and minimum power consumption from the network, the air supplied to it should have recommended parameters. Within the range of permissible parameters, the devices will function, but exposure to them for too long under such conditions may lead to reduced performance and shortened service life.

The classes adopted by ASHRAE are:

- A1: Server room with strictly controlled parameters such as dew point, temperature and relative humidity, in which critical operations are carried out; types of devices that are dedicated to these places include corporate servers and storage servers.
- A2 / A3 / A4: IT space with certain control of parameters such as dew point, temperature, relative humidity; types of devices that are dedicated to these classes are memory servers, personal computers, workstations. Of the classes listed, the one with the highest requirements is class A2 and the lowest is A4.

Table 1 lists the parameters for individual classes, and Fig. 11. Graphic representation of the operating ranges of devices, where: DP (dew point) means dew point, RH (Relative Humidity) - relative humidity.

Table 1. Classes of Data Center objects according to ASHRAE classification

Class	Dry bulb thermometer ^{o}C	Dew point max. ^{o}C	Relative humidity
Recommended values			
A1 do A4	18 – 27		5.5^{o}C DP-60% RH and 15 ^{o}C D
Acceptable values			
A1	15 – 32	17	20 – 80%
A2	10 – 35	21	20 – 80%
A3	5-40	24	-12° C DP and 8-85% RH
A4	5-45	24	-12° C DP and 8-90% RH

Based on Table 1 and analysis of data from previous editions of the ASHRAE manual, it can be seen that the recommended inlet temperature range is becoming wider (in 2004, ASHRAE recommended temperatures in the 20-25°C range). It would seem, therefore, that by constantly expanding these limits and allowing the equipment to cool with air at a higher temperature, an economic effect will be achieved, as the demand for cold will decrease. However, it turns out that by increasing the inlet air temperature, and thus - its expense - the power consumption of the fans

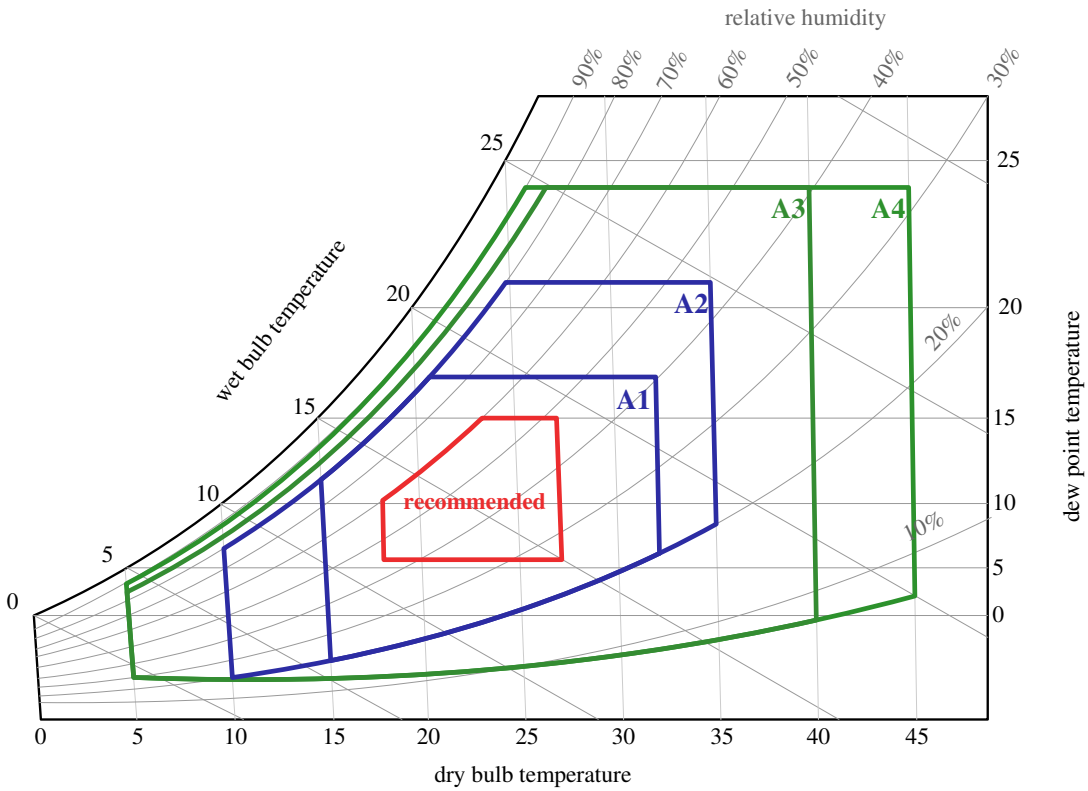

Figure 11. Graphic representation of the ASHRAE classification [1]

also increases (ASHRAE research on a group of over 1000 different devices [13][10]). Paradoxically, there may be a situation where the effect will be completely different from the intended one by increasing the temperature too much. To achieve balance and reconcile the benefit of increasing temperature with reduced airflow, cool the intake air to 22 - 24°C [12].

4.2 Evaluation of server room efficiency

Nowadays, investors' attention is increasingly focused on the energy efficiency of the server room. It is estimated that the energy needed to air-condition a server room is up to 42% of the total energy supplied to it - this fact results in a great interest in the topic of cooling, because there are great potential possibilities to minimize the costs associated with its operation.

An indicator that can be a preliminary step to assessing investments in this respect is the PUE indicator (Power Usage Effectiveness), which is calculated by dividing the total power delivered to the server room by the power consumed by the servers working in it. This indicator can be used to determine the energy consumption of each element of the data center infrastructure independently.

$$\text{PUE} = \frac{total \quad power \quad delivered \quad to \quad the \quad server \quad room}{power \quad consumed \quad by \quad servers}$$

When assessing the energy consumption of the cooling system, the sum of the power consumed by the servers and by air conditioning appears in the equation counter. The PUE indicator is always greater than 1 and, which is easy to see, the smaller it is - the more energy-efficient the system is. However, in some cases this assessment can be misleading. If air conditioning is used in which the inlet temperature is too high, the power consumed by the servers increases, so the quotient and the PUE denominator decreases. Only the cost of using such an object increases, which means that this indicator is not always reliable and its use requires prudence. However, if it was calculated according to accepted standards, it can be used as a preliminary assessment of the system.

4.3 Tier classification for server rooms

The word tier means standard or level in English. In relation to the data center, it means exactly the same - it determines the level of availability and reliability of all elements affecting the functioning of the data center, such as air conditioning system, power supply, building characteristics. The classification is based on a four-point scale, in which the largest number means the highest level of reliability. There are two separate institutions that in their own way specify the requirements that a building must meet in order to qualify for a given class. One of them, The Uptime Institute, was the first to issue a set of guidelines for each of the classes marked with Roman numbers: Tier I, Tier II, Tier III, Tier IV. The document provides guidelines for infrastructure and a minimum level of accessibility for each class. The second institution - Telecommunications Industry Association, also known as TIA, using the original and extending existing guidelines created the TIA-942 standard, which has also become one of the most popular sources of tips optimizing data-center projects. The classes in TIA-942 are marked with Arabic numerals: Tier 1, Tier 2, Tier 3, Tier 4.

The difference between Tier classifications is very important: the TIA-942 classification is a set of rigid guidelines collected in the form of many tables and points, identical for each data center, while The Uptime Institute adapts its standards to a given facility, its needs and purpose, which makes that his assessment is more reliable.

5 Conclusions

From the point of view of the technology itself, it seems that server room cooling is no different from other cooling systems. However, due to the high density of heat flux - reaching up to several dozen kW / m2 and year-round operation in cooling mode, the systems must be constructed differently than standard solutions in other industries. Due to their specificity of work in data center air-conditioning systems, cost-effective solutions that are not applicable in other industries are profitable. In addition, the classification of cooling systems is closely linked to the classification of entire data centers and it is not possible to consider the cooling system alone in terms of energy efficiency without specifying the purpose of its work.

References

1. *ASHRAE Handbook, Data centers and telecommunication facilities* chap. 19 (2015).
2. Baryłka, A. The impact of fire on changing the strength of the underground shelter structure. *Rynek Energii* **146,** 71–75 (1 2020).
3. Chwieduk, D. Towards modern options of energy conservation in buildings. *Renew. Energy* (2017).
4. Grzebielec, A. & Szelagowski, A. Use of the water-silicagel sorption set in a refrigeration unit. *Przemysł Chemiczny* **96** (2017).
5. Grzebielec, A., Rusowicz, A. & Szelągowski, A. Zastosowanie czynnika chłodniczego R290 (propan) w instalacjach klimatyzacyjnych typu split w aspekcie bezpieczeństwa przeciwwybuchowego. *Zeszyty Naukowe Szkoły Głównej Służby Pożarniczej* **61,** 107–119. ISSN: 0239-5223 (2017).
6. Grzebielec, A., Kłos, N. & Kuta, J. Overview of data center air conditioning systems. *Chłodnictwo* **1,** 4–11 (5 2018).
7. *HiRef products overview* 2016.
8. Huang, Q., Shao, S., Zhang, H. & Tian, C. Development and composition of a data center heat recovery system and evaluation of annual operation performance. *Energy* **189,** 116200. ISSN: 0360-5442 (2019).
9. Jaworski, M., Bednarczyk, M. & Czachor, M. Experimental investigation of thermoelectric generator (TEG) with PCM module. *Applied Thermal Engineering* **96,** 527 –533. ISSN: 1359-4311 (2016).
10. Jędrzejuk, H. & Rucińska, J. Verifying a Need of Artificial Cooling - A Simplified Method Dedicated to Single-family Houses in Poland. *Energy Procedia* **78.** 6th International Building Physics Conference, IBPC 2015, 1093 –1098. ISSN: 1876-6102 (2015).
11. Kajurek, J. & Rusowicz, A. Use of Rankine Organic Cycle (ORC) powered by low temperature heat sources for electricity production. *Aparatura Badawcza i Dydaktyczna* **22,** 159–173 (2017).
12. Kowalski, P. Elementy składowe efektywnego i bezpiecznego systemu klimatyzacji precyzyjnej centrum przetwarzania danych. *Chłodnictwo and Klimatyzacja* **12,** 38–39 (2011).
13. Kowalski, P. Elementy składowe efektywnego i bezpiecznego systemu klimatyzacji precyzyjnej centrum przetwarzania danych. *Chłodnictwo and Klimatyzacja* **6,** 22–24 (175 2013).
14. Kłos, N. Analiza systemu chłodzenia serwerowni z wykorzystaniem symulacji CFD. *Warsaw University of Technology* (2018).

15. Luo, Y., Andresen, J., Clarke, H., Rajendra, M. & Maroto-Valer, M. A decision support system for waste heat recovery and energy efficiency improvement in data centres. *Applied Energy* **250,** 1217 –1224. ISSN: 0306-2619 (2019).
16. Owczarek, S., Owczrek, M. & Gawryś, D. Analytical model of wetting the porous medium. *Safety Engineering of Anthropogenic Objects* **1** (2020).
17. Parys, J. Klimatyzatory split w małych serwerowniach. *Chłodnictwo i Klimatyzacja* **6,** 53–55 (197 2015).
18. Rusowicz, A. & Grzebielec, A. Refrigeration equipment as essential elements of a heat recovery system in public buildings. *Rynek Energii* **113,** 125–129 (2014).
19. Skorzyniowska, D. Klimatyzacja serwerowni - ogólne spojrzenie na problematykę, Cepłownictwo. *Cepłownictwo, Ogrzewnicto i Wentylacja* **1** (37 2013).
20. Szelągowski, A. & Grzebielec, A. Performance comparison of a silica gel-water and activated carbon-methanol two beds adsorption chillers. *E3S Web of Conferences* (2017).
21. Wróbel, P. Od gór po morza, czyli o ekstremalnych lokalizacjach Data Center. *Chłodnictwo i Klimatyzacja* **6,** 24–27 (208 2016).
22. Zhou, Q., Lou, J. & Jiang, Y. Optimization of energy consumption of green data center in e-commerce. *Sustainable Computing: Informatics and Systems* **23,** 103 –110. ISSN: 2210-5379 (2019).
23. Żuk, M. Zamknięcie korytarzy zimnych i gorących. *Chłodnictwo i Klimatyzacja* **5,** 48–49 (141 2010).
24. Żuk, M. Wstęp do standaryzacji PUE cz.1. *Chłodnictwo i Klimatyzacja* **10,** 27–28 (2012).